PQS PRACTICAL QUALITY SYSTEMS
Fast Custom Manufacturing - Nationwide Installation Services

Pole Mount w/ 8” arm and a biased screen pan and tilt head PN 80015

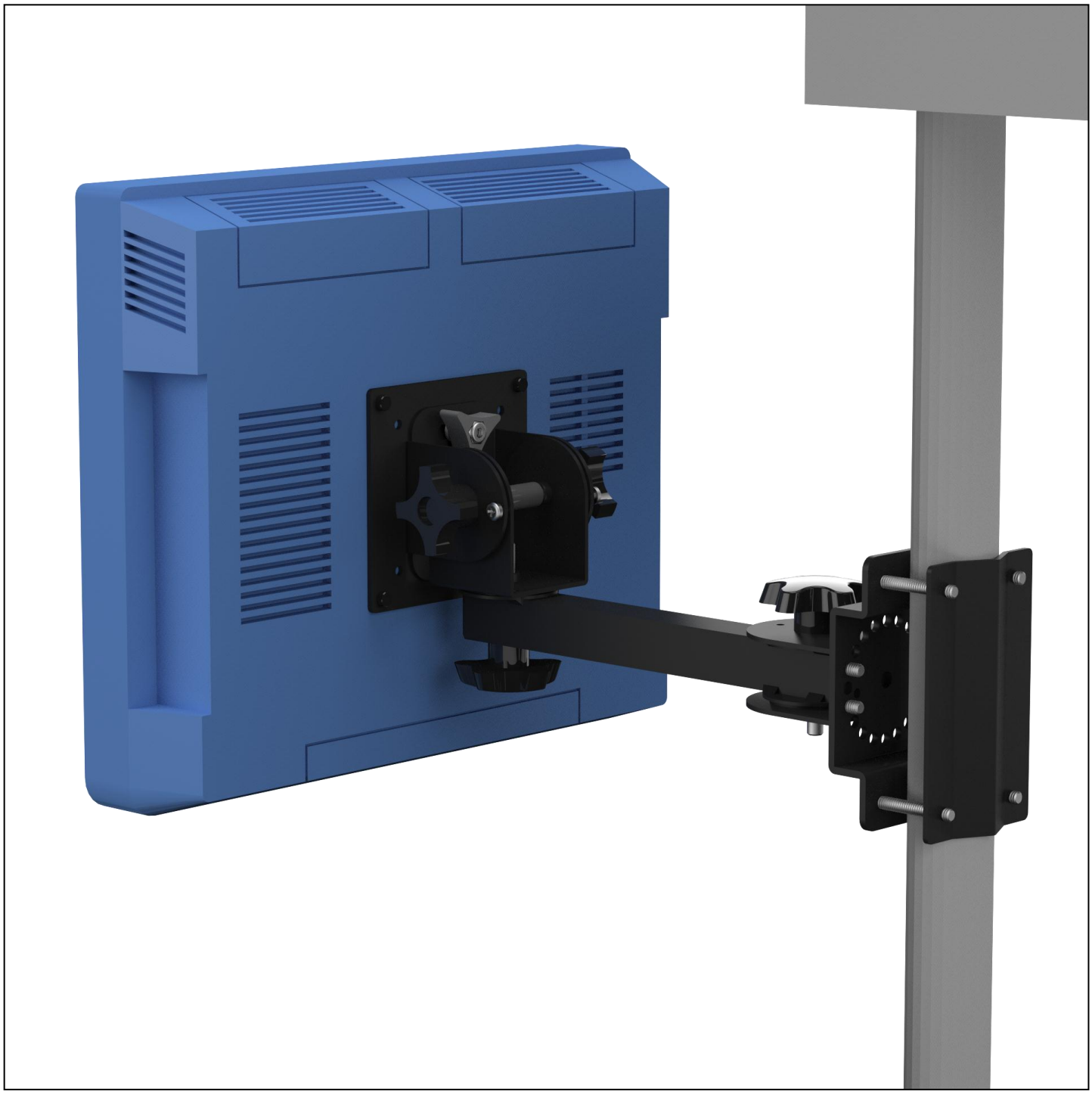

All mounting systems are also available for all VESA and NON VESA compatible screens.

info@practicalqualitysystems.com WWW.PRACTICALQUALITYSYSTEMS.COM (818) 993-1022

ALL PRODUCTS PATENT PENDING

Pole Mount w/ 8” arm and a biased screen pan and tilt head PN 80015

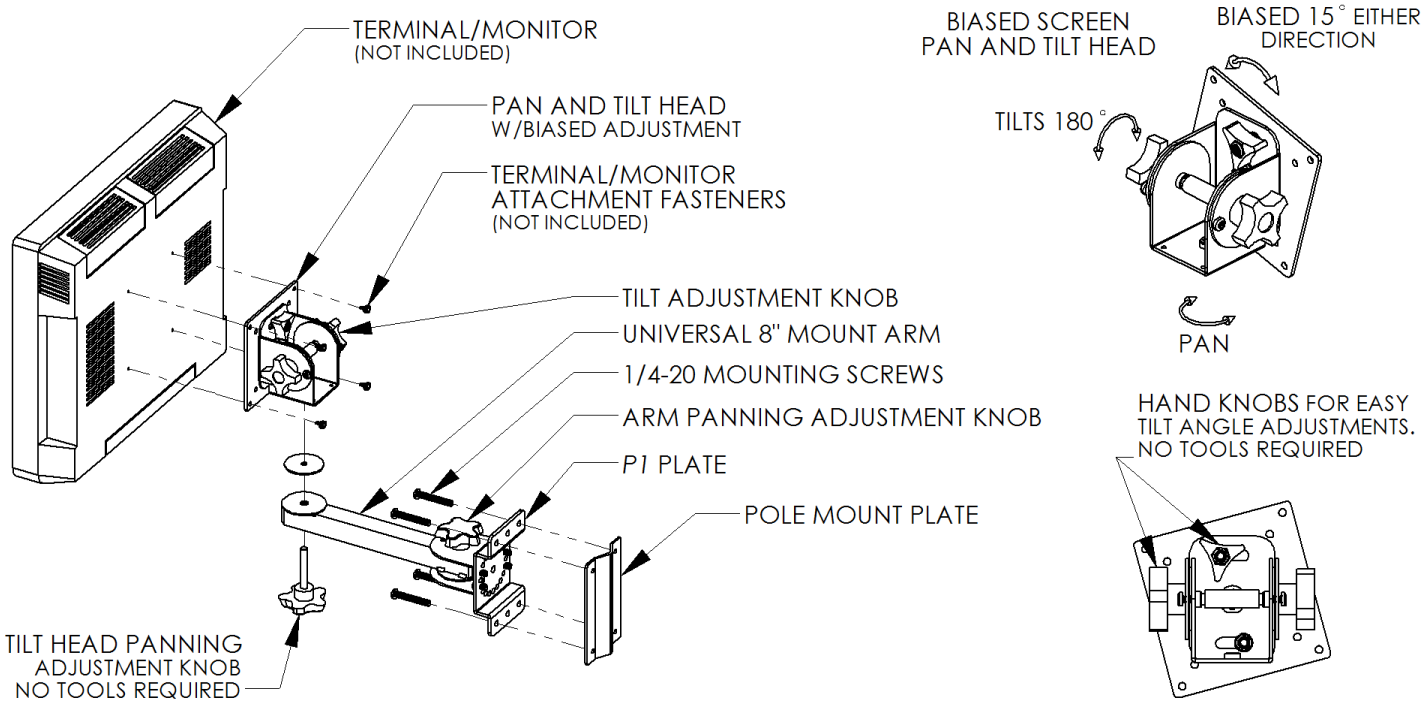

NOTE: Horizontally mounted 80000 with a 75/100mm VESA pan and tilt head shown. All assemblies with NON VESA compatible pan and tilt heads will appear differently.

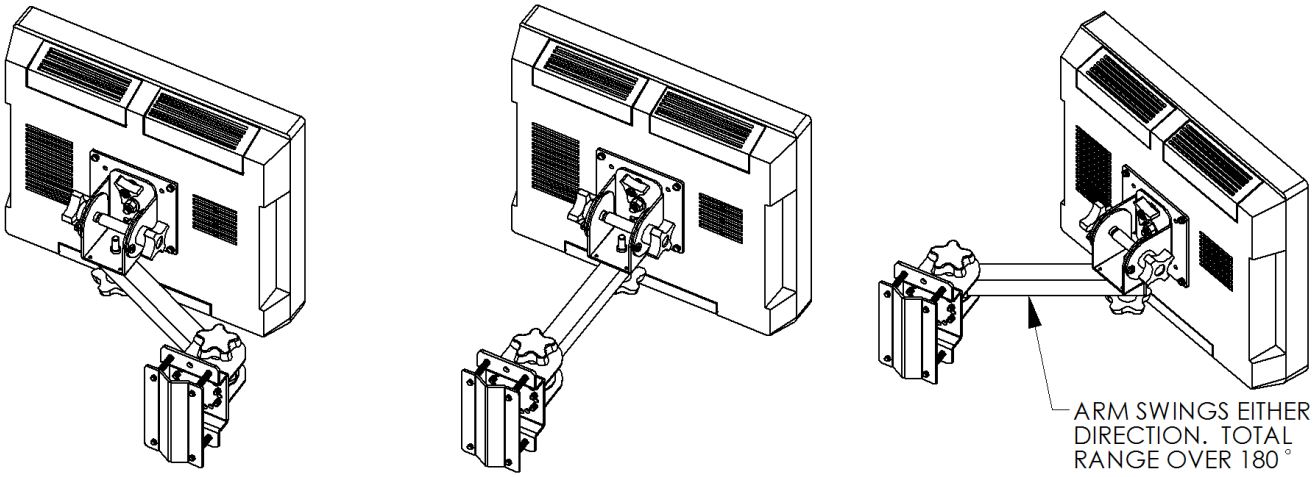

PRODUCT SPECIFICATIONS

- The mounting plate may be rotated to create a wider variety of mounting options.
- The assembly supports touch screens, terminals or flat panel monitors up to 20” (all images are shown with a 15” screen).
- Attaches to a 1-5/8” diameter pole. For attaching to larger diameter poles remove the pole mount plate and use U-bolts with the *single arm mounting plate* to attach to any pole up to 3 ½” OD.
- Can also attach to any shelf, flat horizontal or vertical surface by simply removing the pole mounting plate.

Pole Mount w/ 8” arm and a biased screen pan and tilt head PN 80015

- The pan and tilt head permits side to side rotation and up and down tilting of the terminal. The bias tilt slot allows for a third axis of adjustment. Heavy duty locking hand knobs and anti-slip washers on the sides and bottom act to secure the tilt angles and side to side position at any desired position.

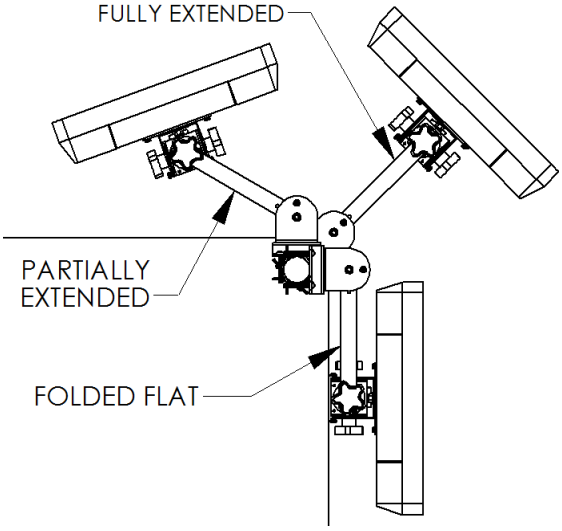

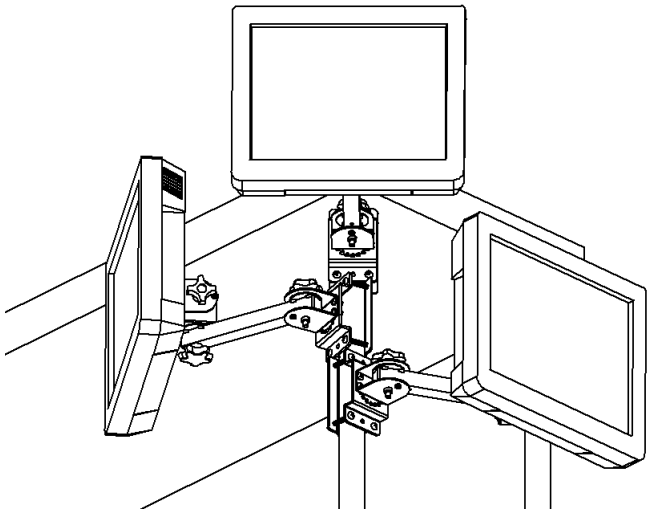

- The position of the 8” arm adjusts without tools and permits the pan and tilt head to travel horizontally, allowing a wide range of screen locations.
- The position of the pan and tilt head can also be locked more securely for the long term by tightening locking screws on the pan and tilt head with a Phillips screw driver.
- The position of the arm can also be locked more securely for the long term by tightening the arm locking screw with a Phillips screw driver.
- Pole mounting system also works with our *Wall Mount w/ 8” Arm and a Universal Printer Mounting Tray* (*See adjacent image*).
- Each arm supports up to 15 lbs.
- This assembly is one of our modular mounting systems. This system includes many components which can be mixed and matched to create a custom support solution for any mounting location. Most of our modular mounting system assemblies can be easily reconfigured in the field for a different application by either adding or removing a few parts.

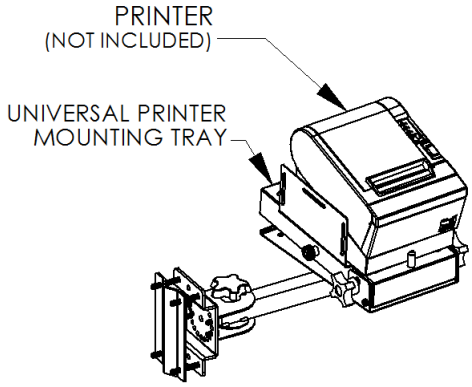

- For assembly instructions see the user manual which can be downloaded from the *Product Resources* page on our website.
- All wall mountable assemblies can be ordered with an optional *Stud Bridge Mounting Plate* (PN 50360) that supports up to three arms and attaches to wall studs spaced at 16" on center.
- All wall mountable assemblies can be ordered with an optional *Pole Mounting Plate* (PN 50386) that supports up to three arms and attaches to any pole up to 8" diameter or column up to 24”.
- To order this assembly use part number 80000-402.
- Available with pan and tilt heads to support all VESA and NON VESA compatible touch screens, terminals or flat panel monitors. Refer to the *Custom Fit Pan and Tilt Heads* page on our website found in the *Other Products* section for the most current list of options. If the website doesn’t show a suffix that represents your compatible pan and tilt head then send us a sample of your screen and we’ll create a *Custom Fit* solution for you.

Pole Mount w/ 8” arm and a biased screen pan and tilt head PN 80015

MOUNTING OPTIONS:

- All of our screen pan and tilt heads can be used with any of the following mounting systems.

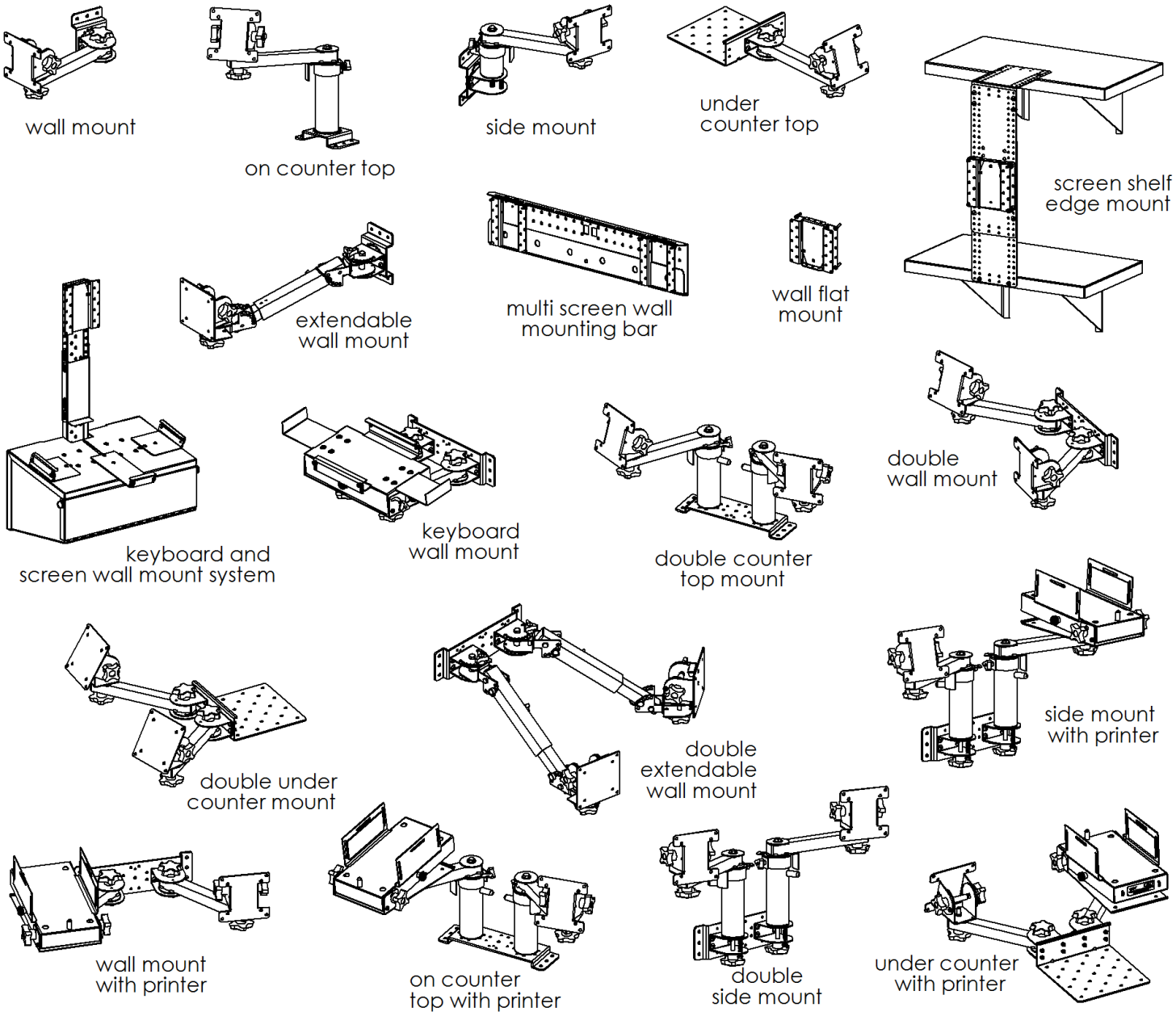

ALL PRODUCTS PATENT PENDING